BELWITH KEELER®

2022 BELWITH KEELER SUPPLEMENT

Designed in-house in Michigan

Since 1893, Belwith Keeler has built a legacy of artistry and innovation in the hardware industry. Based in Michigan, our team of design professionals scout the latest styles from the furniture and interior design sphere and find inspiration from the latest fashion shows from New York to Milan.

Our designers then re-imagine this wide breadth of creativity into fine hardware for your home. Our product undergoes intense scrutiny and rigorous finish testing from our master craftsmen and Quality Assurance teams. We check for quality, consistency, fit and finish. Only the very best are added into our living library of legacy design. Our promise is to continue to offer you the very finest.

belwithkeeler.com
@belwithkeeler
youtube.com/belwithkeelerdecorsolutions
facebook.com/belwithkeeler
pinterest.com/belwithkeeler

New Finishes & Sizes

Size, finish, proportion, and style are all critical elements in the decision making process of selecting the perfect hardware for your space. Belwith Keeler is proud to continuously conduct research and experiment with emerging finish applications. Our company is also consistently developing new and exciting finishes that are trend-right to perfectly complement evolving tastes.

We understand the need to select hardware that offers balance and proportion with respect to your own unique cabinetry choices. In this catalog supplement are new and added finishes, as well as size extensions and new style adds that include hooks, backplates, and more.

Featured on Cover:

Sinclaire Collection
T-Knob, B076886-MBBGB
96mm C/C Pull, B076888-MBBGB
128mm C/C Pull, B076890-MBBGB

Brownstone

Champagne Bronze | 224mm C/C Pulls | B077464-CBZ

A	Anders	6
	Avenue	7
B	Brighton	8
	Brownstone	9
C	Cambridge	10
	Corsa	11
	Coventry	12
E	Emerge	14
F	Facette	15
	Firenze	16
	Flex	17
	Fuller	18
M	Monarch	19
	Monroe	20
O	Olivet	21
R	Reserve	22
S	Sandrine	23
	Sinclaire	24
	Studio II	25
T	Trellis	26
U	Urbane	27
V	Vale	28
	Verge	29

Designer Talks

Head over to YouTube to learn more about the inspirations and processes that led to the rise of our collections straight from Belwith Keeler creatives with the **Designer Talks** series at:

youtube.com/BelwithKeelerDecorSolutions

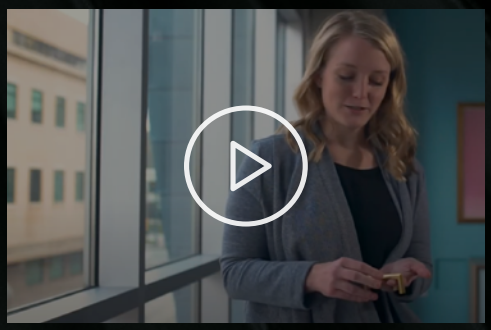

Coventry

Satin Nickel | 12” C/C Pulls with Coordinating Backplates | B079453SN, B079455SN
1-1/4” Square Knobs with Coordinating Backplates | B077986SN, B77995SN

Anders

2021 COLLECTION

SN | Satin Nickel

BGB | Brushed Golden Brass

MB | Matte Black

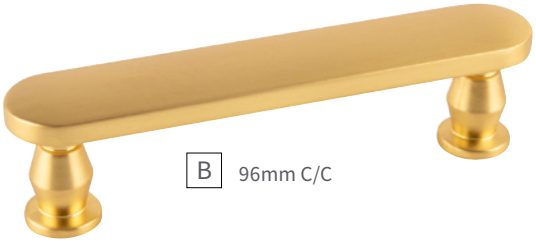

B 96mm C/C

A

1-1/4” DIA.

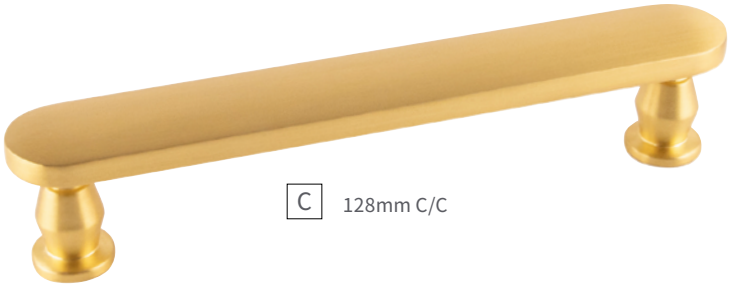

C 128mm C/C

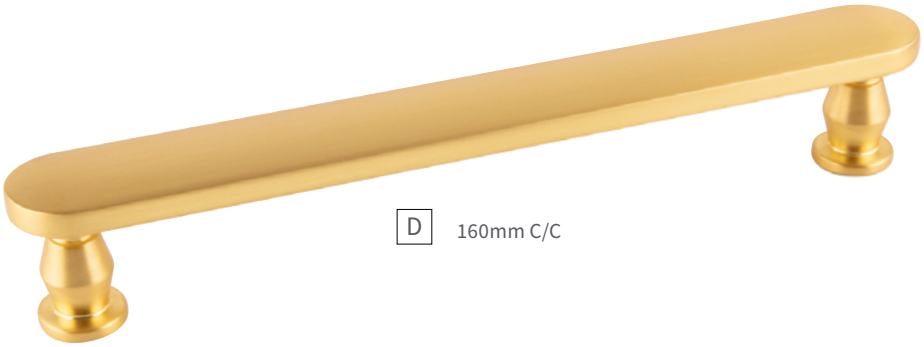

D 160mm C/C

Learn more about the collection in our **Designer Talks** series.

Anders Video

A	KNOB	**B078788BGB** D: 1-1/4” P: 1-1/4” B: 5/8”	**C**	PULL	**B078790BGB** C/C: 128mm L: 5-15/16” W: 7/8” P: 1-1/4”
B	PULL	**B078789BGB** C/C: 96mm L: 4-5/8” W: 7/8” P: 1-1/4”	**D**	PULL	**B078791BGB** C/C: 160mm L: 7-3/16” W: 7/8” P: 1-1/4”

Avenue

NEW FINISH

CH | Chrome

14 | Polished Nickel

SN | Satin Nickel

BGB | Brushed Golden Brass | **2021 New Finish**

MB | Matte Black

C 3” C/C

D 96mm C/C

E 128mm C/C

A 2” LENGTH

F 160mm C/C

B 1-1/2” C/C

G 192mm C/C

H 224mm C/C

I 12” C/C

A	KNOB	**B076087-MB** L: 2” W: 1” P: 1” B: 1/2” SQ.	**F**	PULL	**B076091-MB** C/C: 160mm L: 6-13/16” W: 1” P: 1-1/16”
B	PULL	**B076086-MB** C/C: 1-1/2” L: 2” W: 1” P: 1”	**G**	PULL	**B076092-MB** C/C: 192mm L: 8-1/16” W: 1” P: 1-1/8”
C	PULL	**B076088-MB** C/C: 3” L: 3-1/2” W: 1” P: 1”	**H**	PULL	**B076093-MB** C/C: 224mm L: 9-5/16” W: 1” P: 1-1/8”
D	PULL	**B076089-MB** C/C: 96mm L: 4-1/4” W: 1” P: 1”	**I**	PULL	**B076094-MB** C/C: 12” L: 12-1/2” W: 1” P: 1-3/16”
E	PULL	**B076090-MB** C/C: 128mm L: 5-9/16” W: 1” P: 1-1/16”			

Brighton

NEW SIZES & DESIGNS

SN | Satin Nickel

BGB | Brushed Golden Brass

MB | Matte Black

A 1” SQ.

E 3” C/C

F 96mm C/C

B 1-1/4” SQ.

G 128mm C/C

C 1-1/2” C/C

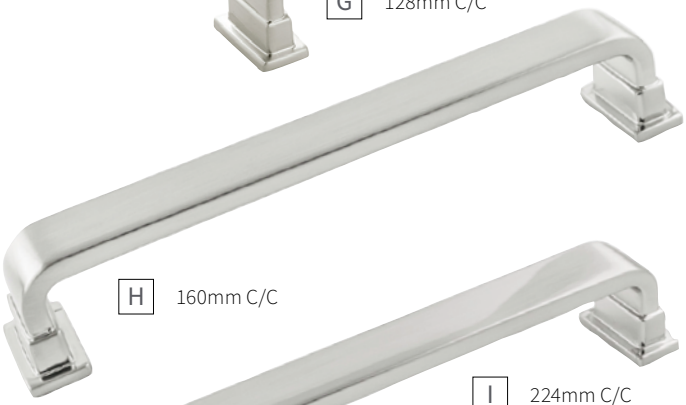

H 160mm C/C

D 96mm C/C

I 224mm C/C

Learn more about the collection in our **Designer Talks** series.

Brighton Video

A	KNOB	**B077890SN** SQ: 1” P: 1” B: 3/4”	**F**	PULL	**B077893SN** C/C: 96mm L: 4-3/8” W: 1-1/8” P: 1-3/16”
B	KNOB	**B077889SN** SQ: 1-1/4” P: 1” B: 3/4”	**G**	PULL	**B077894SN** C/C: 128mm L: 5-11/16” W: 1-1/8” P: 1-3/16”
C	HOOK	**B077900SN** | **2022 New Design** C/C: 1-1/2” L: 4-5/16” B: 2-1/8” x 1-1/16” W: 2-1/8” P: 2-9/16”	**H**	PULL	**B077895SN** | **2022 New Size** C/C: 160mm L: 6-15/16” W: 1-1/8” P: 1-3/16”
D	CUP PULL	**B077958SN** | **2022 New Design** C/C: 96mm L: 4-3/8” W: 1-7/16” P: 1-1/16”	**I**	PULL	**B077897SN** | **2022 New Size** C/C: 224mm L: 9-7/16” W: 1-1/8” P: 1-3/16”
E	PULL	**B077892SN** C/C: 3” L: 3-5/8” W: 1-1/8” P: 1-3/16”			

Brownstone

NEW FINISH

CH | Chrome

14 | Polished Nickel

SN | Satin Nickel

BGB | Brushed Golden Brass

CBZ | Champagne Bronze | **2022 New Finish**

MB | Matte Black

A 1-1/4" DIA.

B 1-1/8" SQ.

C 1-3/8" SQ.

D 3" & 96mm C/C

E 128mm C/C

F 160mm C/C

G 224mm C/C

H 12" C/C

Learn more about Champagne Bronze (CBZ) in our **Designer Talks** series.

CBZ Video

A	KNOB	**B077459-CBZ** D: 1-1/4" P: 1-1/4" B: 13/16"	**E**	PULL	**B077462-CBZ** C/C: 128mm L: 6-5/8" W: 3/4" P: 1-5/16"
B	KNOB	**B077458-CBZ** SQ: 1-1/8" P: 1-1/4" B: 13/16" SQ	**F**	PULL	**B077463-CBZ** C/C: 160mm L: 7-13/16" W: 3/4" P: 1-5/16"
C	KNOB	**B077460-CBZ** SQ: 1-3/8" P: 1-1/4" B: 1" SQ	**G**	PULL	**B077464-CBZ** C/C: 224mm L: 10-3/8" W: 3/4" P: 1-5/16"
D	PULL	**B077461-CBZ** C/C: 3" & 96mm L: 4-15/16" W: 3/4" P: 1-5/16"	**H**	PULL	**B077465-CBZ** C/C: 12" L: 13-9/16" W: 3/4" P: 1-3/8"

Cambridge

NEW SIZES & DESIGNS

SN | Satin Nickel

BGB | Brushed Golden Brass

MB | Matte Black

C 3” C/C

D 96mm C/C

A 1-1/4” SQ.

E 128mm C/C

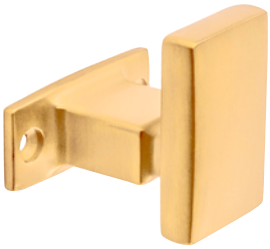

B 1-3/4” C/C

F 160mm C/C

G 224mm C/C

Learn more about the collection in our **Designer Talks** series.

Cambridge Video

A	KNOB	**B077924BGB** SQ: 1-1/4” P: 1-1/16” B: 1” X 3/4”	**E**	PULL	**B077927BGB** C/C: 128mm L: 5-3/4” W: 3/4” P: 1-1/16”
B	HOOK	**B077962BGB** | **2022 New Design** C/C: 1-3/4” L: 2-1/8” W: 2-1/4” B: 2-1/4” x 1” P: 1-15/16”	**F**	PULL	**B077928BGB** | **2022 New Size** C/C: 160mm L: 7-1/16” W: 1” P: 1-1/16”
C	PULL	**B077925BGB** C/C: 3” L: 3-3/4” W: 3/4” P: 1-1/16”	**G**	PULL	**B077930BGB** | **2022 New Size** C/C: 224mm L: 9-9/16” W: 1” P: 1-1/16”
D	PULL	**B077926BGB** C/C: 96mm L: 4-1/2” W: 3/4” P: 1-1/16”			

SN | Satin Nickel

BGB | Brushed Golden Brass

MB | Matte Black

B 1” C/C

A 1-3/4” LENGTH

C 3” & 96mm C/C

D 128mm & 160mm C/C

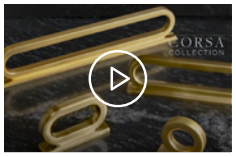

Learn more about the collection in our **Designer Talks** series.

Corsa Video

A	KNOB	**B078787MB** L: 1-3/4” W: 5/8” P: 1-1/2” B: 1-3/4” x 5/8”	**C**	PULL	**B078785MB** C/C: 3” & 96mm L: 5-1/8” W: 5/8” P: 1-1/2”
B	PULL	**B078784MB** C/C: 1” L: 2-3/8” W: 5/8” P: 1-1/2”	**D**	PULL	**B078786MB** C/C: 128mm & 160mm L: 7-3/4” W: 5/8” P: 1-1/2”

Coventry

NEW FINISHES, SIZES & DESIGNS

CH | Chrome | **2022 New Finish**

14 | Polished Nickel | **2022 New Finish**

SN | Satin Nickel

BGB | Brushed Golden Brass

MB | Matte Black

A 1-1/4" SQ.

B 1-3/4" X 1-1/4"

C 3" C/C

D 96mm C/C

E 128mm C/C

F 160mm C/C

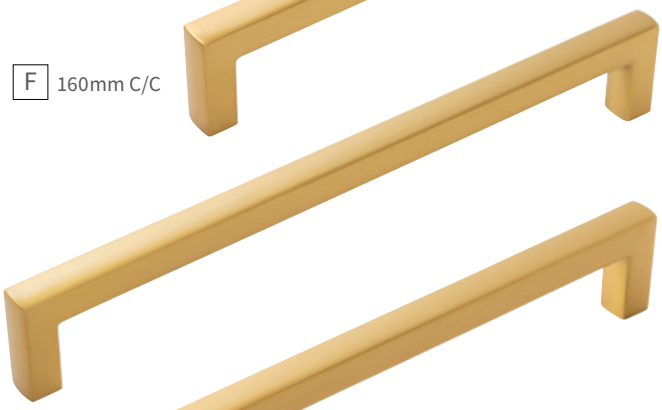

G 224mm C/C

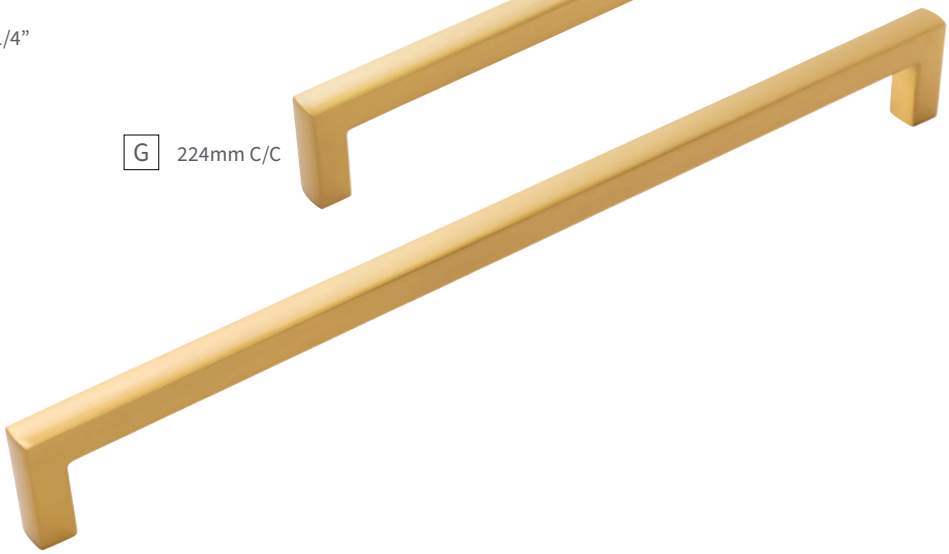

H 12" C/C

A	KNOB	**B077986BGB** SQ: 1-1/4" P: 1-3/16" B: 3/8"	**E**	PULL	**B077989BGB** C/C: 128mm L: 5-1/2" W: 1/2" P: 1-7/16"
B	KNOB BACKPLATE	**B077995BGB** L: 1-3/4" W: 1-1/4" P: 3/16"	**F**	PULL	**B077990BGB** | **2022 New Size** C/C: 160mm L: 6-3/4" W: 1/2" P: 1-7/16"
C	PULL	**B077987BGB** C/C: 3" L: 3-1/2" W: 1/2" P: 1-7/16"	**G**	PULL	**B079452BGB** | **2022 New Size** C/C: 224mm L: 9-5/16" W: 1/2" P: 1-7/16"
D	PULL	**B077988BGB** C/C: 96mm L: 4-1/4" W: 1/2" P: 1-7/16"	**H**	PULL	**B079453BGB** | **2022 New Size** C/C: 12" L: 12-1/2" W: 1/2" P: 1-7/16"

Coventry

NEW FINISHES, SIZES & DESIGNS

I 1” C/C

J 1” C/C

K 3” C/C

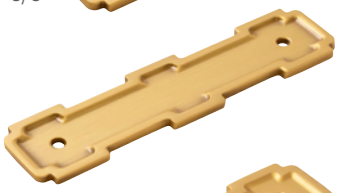

L 96mm C/C

M 128mm C/C

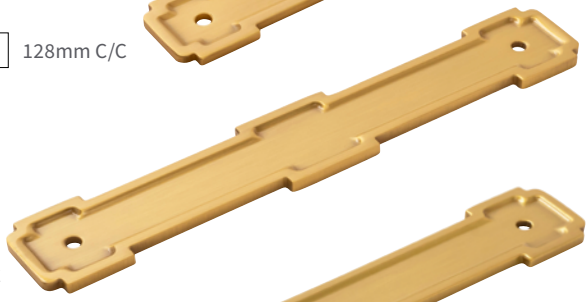

N 160mm C/C

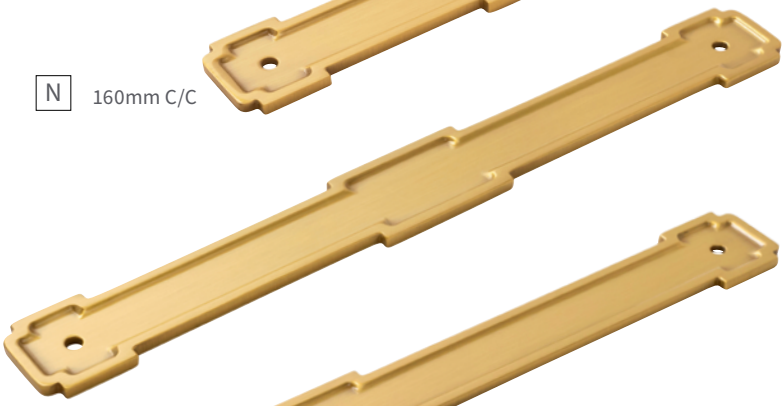

O 224mm C/C

P 12” C/C

Learn more about the collection in our **Designer Talks** series.

Coventry Video

I	HOOK	**B077994BGB** | **2022 New Design** C/C: 1” L: 4-1/2” W: 1-1/2” P: 2-1/2” B: 1-5/8” x 1-1/2”	**M**	BACKPLATE	**B077998BGB** C/C: 128mm L: 6-5/16” W: 1-1/4” P: 3/16”
J	HOOK BACKPLATE	**B078002BGB** | **2022 New Design** C/C: 1” L: 2-5/16” W: 1-3/4” P: 5/16”	**N**	BACKPLATE	**B077999BGB** | **2022 New Size** C/C: 160mm L: 7-9/16” W: 1-1/4” P: 3/16”
K	BACKPLATE	**B077996BGB** | **2022 New Size** C/C: 3” L: 4-1/4” W: 1-1/4” P: 3/16”	**O**	BACKPLATE	**B079454BGB** | **2022 New Size** C/C: 224mm L: 10-1/8” W: 1-1/4” P: 3/16”
L	BACKPLATE	**B077997BGB** | **2022 New Size** C/C: 96mm L: 5-1/16” W: 1-1/4” P: 3/16”	**P**	BACKPLATE	**B079455BGB** | **2022 New Size** C/C: 12” L: 13-1/4” W: 1-1/4” P: 3/16”

Emerge

NEW FINISHES & DESIGNS

CH | Chrome

14 | Polished Nickel

SN | Satin Nickel

BGB | Brushed Golden Brass | **2021 New Finish**

MB | Matte Black | | **2021 New Finish**

D 3” & 96mm C/C

E 128mm & 160mm C/C

A 1-5/16” SQ.

B 1-5/16” DIA.

F 96mm C/C

C 1-1/4” C/C

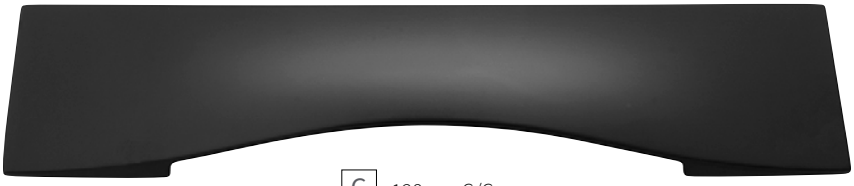

G 128mm C/C

A	KNOB	**B077034-MB** SQ: 1-5/16” P: 1-1/8” B: 7/16” SQ.	**E**	PULL	**B078797-MB** | **2021 New Design** C/C: 128mm & 160mm L: 10-3/4” W: 7/16” P: 1-3/16”
B	KNOB	**B077045-MB** D: 1-5/16” P: 1-3/16” B: 7/16”	**F**	CUP PULL	**B077047-MB** C/C: 96mm L: 5-1/2” W: 1-7/8” P: 13/16”
C	KNOB	**B077046-MB** C/C: 1-1/4” L: 1-3/4” W: 3/4” P: 1-1/4” B: 1-5/8” X 7/16”	**G**	CUP PULL	**B077048-MB** C/C: 128mm L: 7-1/2” W: 1-7/8” P: 7/8
D	PULL	**B078796-MB** | **2021 New Design** C/C: 3” & 96mm L: 7-7/16” W: 7/16” P: 1-1/8”			

Facette

NEW FINISHES & SIZES

CH | Chrome

14 | Polished Nickel

SS | Stainless Steel

CBZ | Champagne Bronze | **2022 New Finish**

MB | Matte Black | **2022 New Finish**

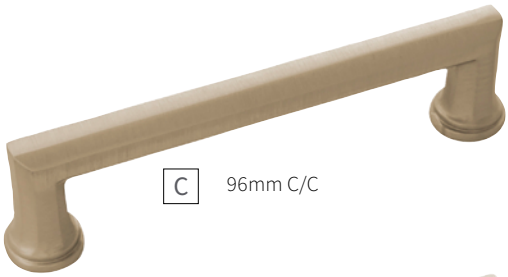
C 96mm C/C

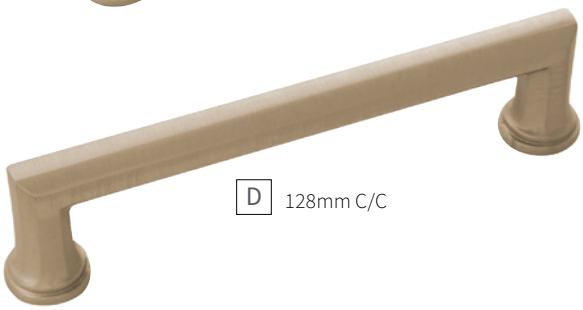
D 128mm C/C

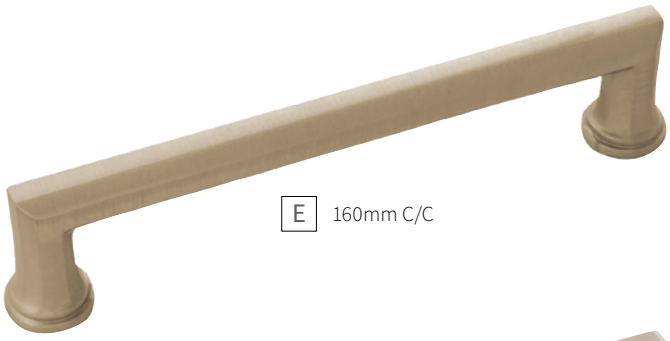
E 160mm C/C

A 1-3/8" DIA.

B 1-1/4" DIA.

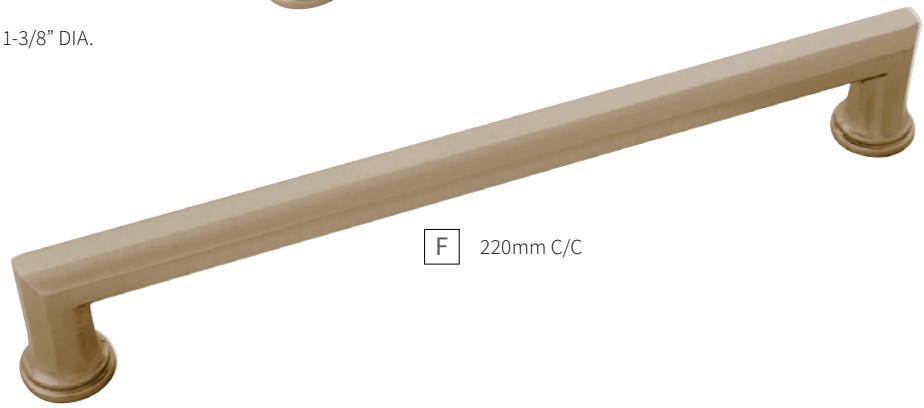
F 220mm C/C

A	KNOB	**B053134-CBZ** D: 1-3/8" P: 1-7/16" B: 5/8"	**D**	PULL	**B072425-CBZ** C/C: 128mm L: 5-7/8" W: 13/16" P: 1-3/8"
B	KNOB	**B054726-CBZ** D: 1-1/4" P: 1-1/8" B: 5/8"	**E**	PULL	**B076542-CBZ** | **2022 New Size** C/C: 160mm L: 7-1/8" W: 7/8" P: 1-7/16"
C	PULL	**B076541-CBZ** | **2022 New Size** C/C: 96mm L: 4-5/8" W: 13/16" P: 1-3/8"	**F**	PULL	**B072442-CBZ** C/C: 220mm L: 9-9/16" W: 7/8" P: 1-1/2"

Firenze

NEW FINISHES

MW-14 | White Marble with Polished Nickel

MW-SN | White Marble with Satin Nickel | **2021 New Finish**

MW-BGB | White Marble with Brushed Golden Brass

MB-BGB | Black Marble with Brushed Golden Brass

MW-MB | White Marble with Matte Black | **2021 New Finish**

A 1-1/4" DIA.

B 2-1/2" LENGTH

C 5" LENGTH

A	KNOB	**B077038MW-BGB** D: 1-1/4" P: 1-3/8" B: 15/16"	**C**	KNOB	**B077044MW-BGB** L: 5" W: 1" P: 1-7/16" B: 1"
B	KNOB	**B077041MW-BGB** L: 2-1/2" W: 1" P: 1-7/16" B: 1"			

Flex

NEW FINISH

CH | Chrome

14 | Polished Nickel

SN | Satin Nickel

BGB | Brushed Golden Brass

MB | Matte Black | **2021 New Finish**

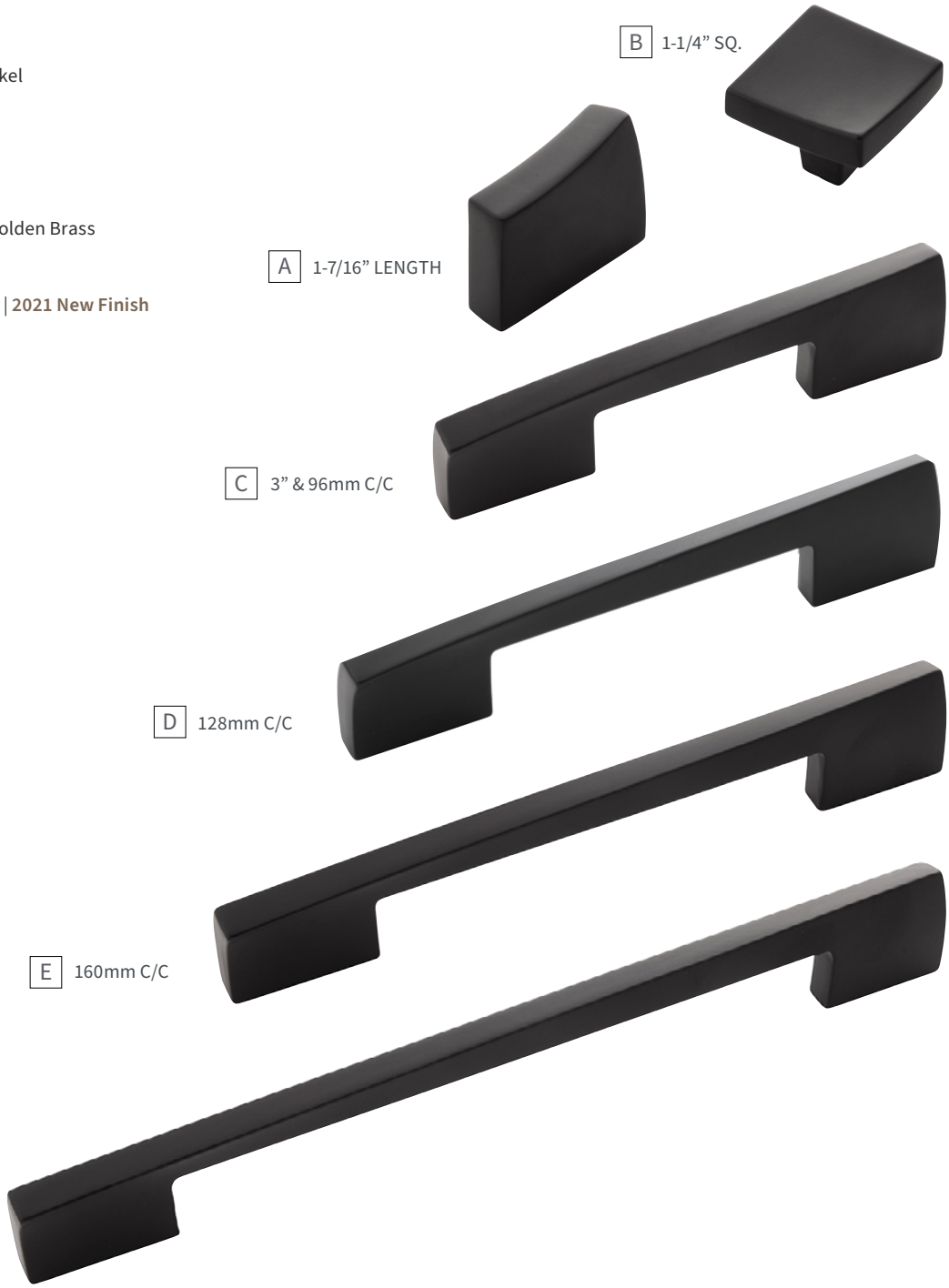

A	KNOB	**B076717-MB** L: 1-7/16” W: 9/16” P: 1-1/8” B: 1-7/16 X 3/8”	**D**	PULL	**B076720-MB** C/C: 128mm L: 6-9/16” W: 13/16” P: 1-1/4”
B	KNOB	**B076716-MB** SQ: 1-1/4” P: 1-1/8” B: 3/8” SQ.	**E**	PULL	**B077023-MB** C/C: 160mm L: 7-13/16” W: 13/16” P: 1-1/4”
C	PULL	**B076719-MB** C/C: 3” & 96mm L: 5-1/4” W: 3/4” P: 1-1/4”	**F**	PULL	**B077024-MB** C/C: 224mm L: 10-5/16” W: 7/8” P: 1-1/4”

Fuller

NEW FINISHES

CH | Chrome

14 | Polished Nickel

SS | Stainless Steel

BGB | Brushed Golden Brass
2021 New Finish

VB | Vintage Bronze

MB | Matte Black
2021 New Finish

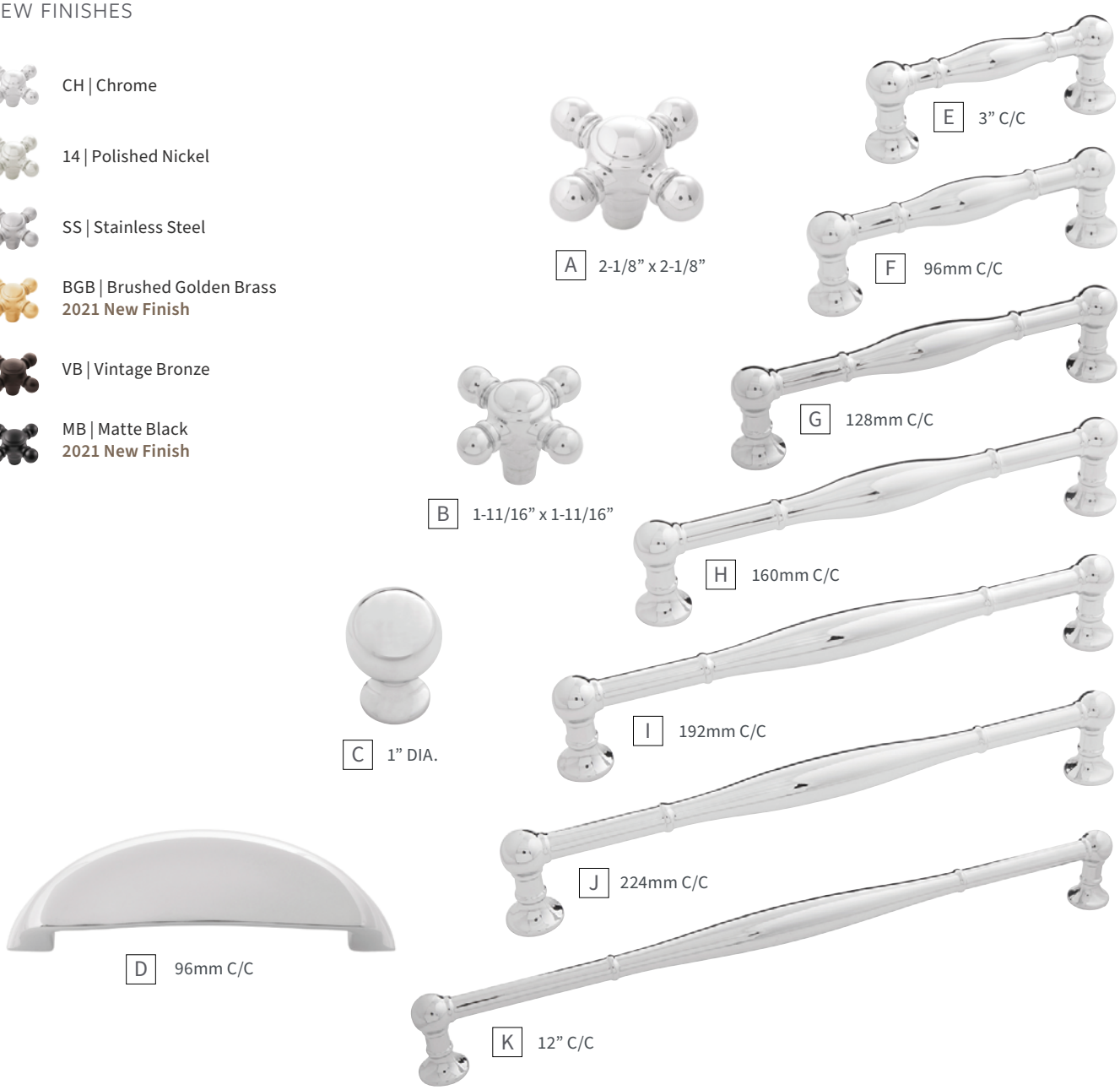

A	KNOB	**B076809-CH** L: 2-1/8” W: 2-1/8” P:1-7/16” B:1/2”	**G**	PULL	**B075060-CH** C/C: 128mm L: 5-13/16” W: 3/4” P: 1-7/16”
B	KNOB	**B075061-CH** L: 1-11/16” W: 1-11/16” P: 1-1/4” B: 3/8”	**H**	PULL	**B076291-CH** C/C: 160mm L: 7” W: 3/4” P: 1-7/16”
C	KNOB	**B076288-CH** D: 1” P: 1-7/16” B: 3/4”	**I**	PULL	**B076292-CH** C/C: 192mm L: 8-5/16” W: 3/4” P: 1-7/16”
D	CUP PULL	**B077090-CH** C/C: 96mm L: 4-9/16” W: 1-1/2” P: 1-1/8”	**J**	PULL	**B076293-CH** C/C: 224mm L: 9-5/8” W: 13/16” P: 1-1/2”
E	PULL	**B076289-CH** C/C: 3” L: 3-3/4” W: 3/4” P: 1-7/16”	**K**	PULL	**B076294-CH** C/C: 12” L: 12-13/16” W: 13/16” P: 1-1/2”
F	PULL	**B076290-CH** C/C: 96mm L: 4-1/2” W: 3/4” P: 1-7/16”			

Monarch

NEW FINISHES

14 | Polished Nickel

SN | Satin Nickel

CH | Chrome

BGB | Brushed Golden Brass

CBZ | Champagne Bronze
2021 New Finish

MB | Matte Black
2021 New Finish

A 1-1/8" LENGTH

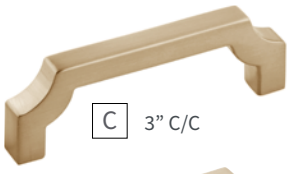

C 3" C/C

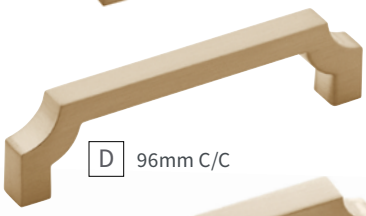

D 96mm C/C

B 1-1/4" LENGTH

E 128mm C/C

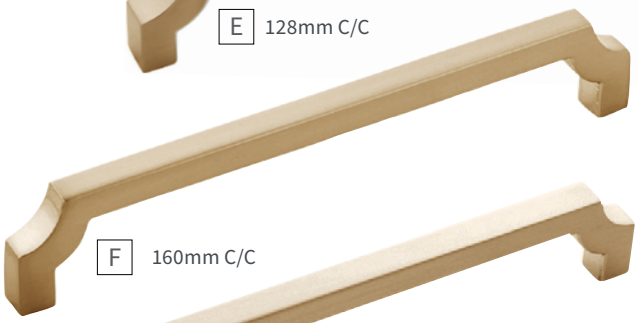

F 160mm C/C

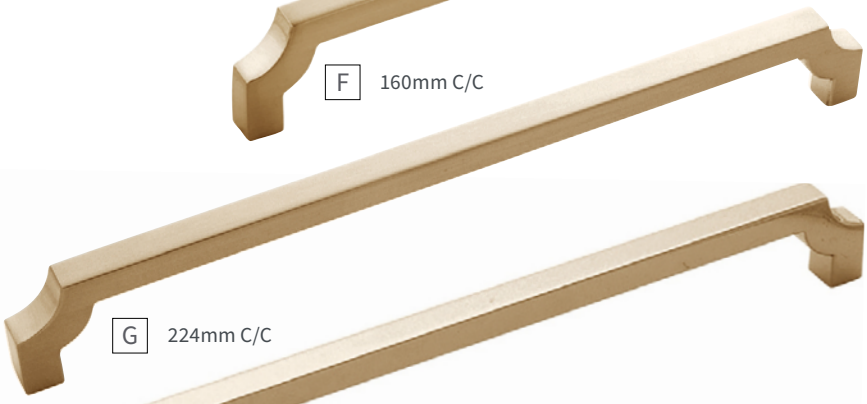

G 224mm C/C

H 12" C/C

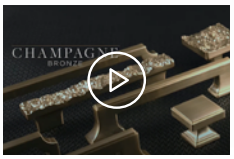

Learn more about Champagne Bronze (CBZ) in our **Designer Talks** series.

CBZ Video

A	KNOB	**B076635-CBZ** L: 1-1/8" W: 1-1/8" P: 1-1/16" B: 5/8"	**E**	PULL	**B076642-CBZ** C/C: 128mm L: 5-7/16" W: 7/16" P: 1-1/8"
B	KNOB	**B076636-CBZ** L: 1-1/4" W: 1-1/4" P: 1-1/8" B: 11/16"	**F**	PULL	**B076643-CBZ** C/C: 160mm L: 6-11/16" W: 7/16" P: 1-1/8"
C	PULL	**B076640-CBZ** C/C: 3" L: 3-3/8" W: 7/16" P: 1-1/8"	**G**	PULL	**B076645-CBZ** C/C: 224mm L: 9-1/4" W: 7/16" P: 1-3/16"
D	PULL	**B076641-CBZ** C/C: 96mm L: 4-3/16" W: 7/16" P: 1-1/8"	**H**	PULL	**B076646-CBZ** C/C: 12" L: 12-7/16" W: 7/16" P: 1-1/4"

Monroe

NEW FINISH

CH | Chrome

14 | Polished Nickel

SN | Satin Nickel

BGB | Brushed Golden Brass

VB | Vintage Bronze

MB | Matte Black
2022 New Finish

B 96mm C/C

C 128mm C/C

D 160mm C/C

A 1-5/16” SQ.

E 224mm C/C

F 12” C/C

A	KNOB	**B076895-14** SQ: 1-5/16” P: 1-1/4” B: 1/2”	**D**	PULL	**B077025-14** C/C: 160mm L: 8-3/8” W: 5/8” P: 1-7/16”
B	PULL	**B076899-14** C/C: 96mm L: 5-7/8” W: 5/8” P: 1-7/16”	**E**	PULL	**B077026-14** C/C: 224mm L: 10-15/16” W: 5/8” P: 1-7/16”
C	PULL	**B076900-14** C/C: 128mm L: 7-1/8” W: 5/8” P: 1-7/16”	**F**	PULL	**B076902-14** C/C: 12” L: 14-1/8” W: 11/16” P: 1-7/16”

Olivet

NEW FINISHES

14 | Polished Nickel

SN | Satin Nickel

BGB | Brushed Golden Brass
2021 New Finish

MB | Matte Black
2021 New Finish

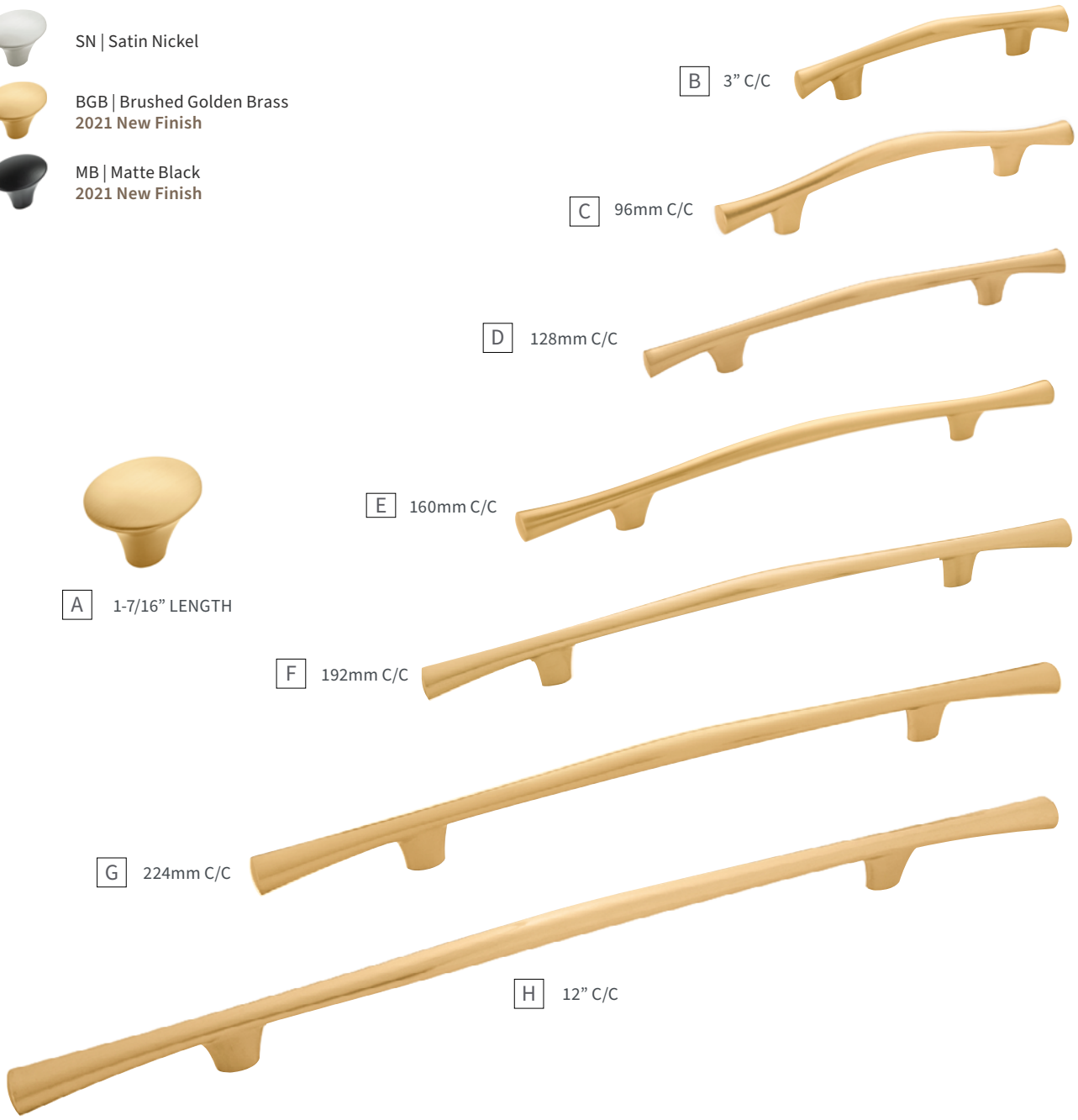

A	KNOB	**B075324-BGB** L: 1-7/16” W: 1-1/8” P: 1-1/8” B: 1/2” x 3/8”	**E**	PULL	**B076039-BGB** C/C: 160mm L: 10” W: 9/16” P: 1-1/8”
B	PULL	**B076037-BGB** C/C: 3” L: 4-3/4” W: 1/2” P: 1-1/8”	**F**	PULL	**B076040-BGB** C/C: 192mm L: 12” W: 11/16” P: 1-5/16”
C	PULL	**B075319-BGB** C/C: 96mm L: 6-1/16” W: 1/2” P: 1-1/8”	**G**	PULL	**B075320-BGB** C/C: 224mm L: 14” W: 11/16” P: 1-5/16”
D	PULL	**B075122-BGB** C/C: 128mm L: 8” W: 9/16” P: 1-1/8”	**H**	PULL	**B075321-BGB** C/C: 12” L: 18-15/16” W: 7/8” P: 1-1/2”

Reserve

2021 COLLECTION

LRSN | Satin Nickel
with Brown Leather

LRBGB | Brushed Golden Brass
with Brown Leather

LRMB | Matte Black
with Brown Leather

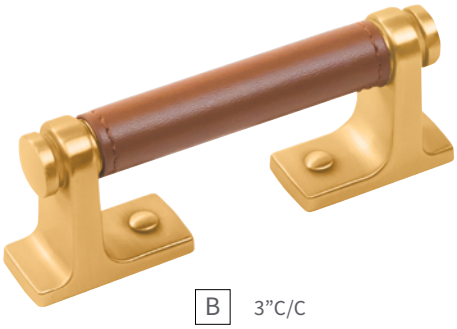

B 3”C/C

A 1-1/4” DIA.

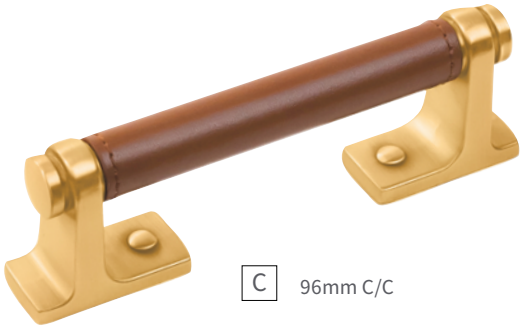

C 96mm C/C

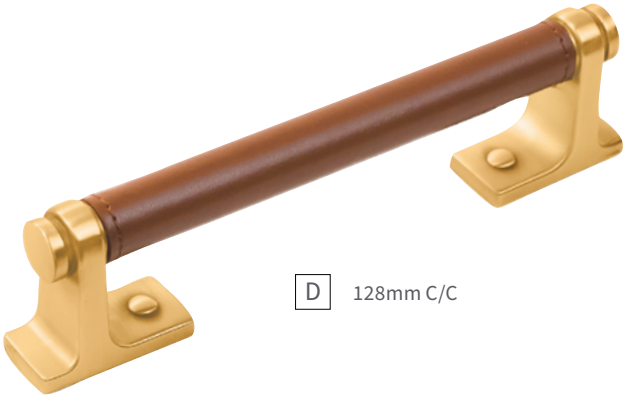

D 128mm C/C

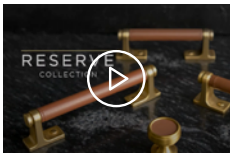

Learn more about
the collection in our
Designer Talks series.

Reserve Video

A	KNOB	**B077977LRBGB** D: 1-1/4” P: 1-1/4” B: 1”	**C**	PULL	**B077979LRBGB** C/C: 96mm L: 4-3/4” W: 11/16” P: 1-1/2”
B	PULL	**B077978LRBGB** C/C: 3” L: 4” W: 11/16” P: 1-1/2”	**D**	PULL	**B077980LRBGB** C/C: 128mm L: 6” W: 11/16” P: 1-1/2”

Sandrine

NEW FINISH

SN | Satin Nickel

CBZ | Champagne Bronze | **2021 New Finish**

VB | Vintage Bronze

BM | Black Mist

B 2” SQ.

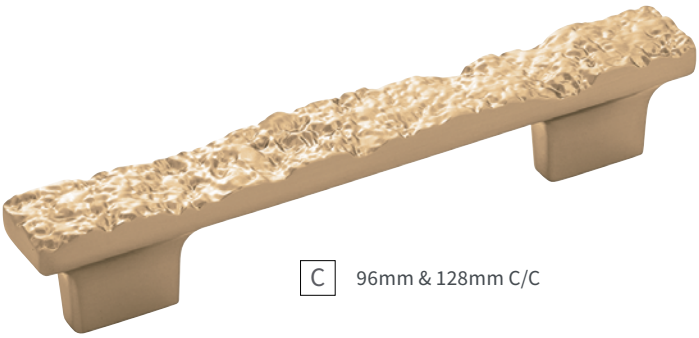

C 96mm & 128mm C/C

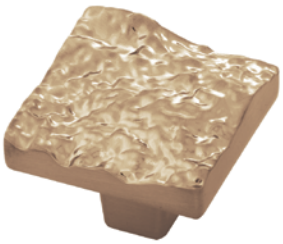

A 1-3/8” SQ.

A	KNOB	**B077512-CBZ** SQ: 1-3/8” P: 1-1/8” B: 7/16” SQ	**C**	PULL	**B077514-CBZ** C/C: 96mm & 128mm L: 6-1/8” W: 13/16” P: 1-3/16”
B	KNOB	**B077513-CBZ** SQ: 2” P: 1-1/8” B: 1/2” SQ			

Sinclaire

NEW FINISH ADD

CH | Chrome

14 | Polished Nickel

SN | Satin Nickel

BGB | Brushed Golden Brass

MBBGB | Matte Black &
Brushed Golden Brass | **2022 New Finish**

MB | Matte Black

A 2-3/8” x 3/4”

D 96mm C/C

E 128mm C/C

F 160mm C/C

G 224mm C/C

H 12“ C/C

B 1-1/4” DIA.

C 1-3/8” DIA.

A	T-KNOB	**B076886-MBBGB** L: 2-3/8” W: 3/4” P: 1-7/16” B: 5/16”	**E**	PULL	**B076890-MBBGB** C/C: 128mm L: 7” W: 3/4” P: 1-7/16”
B	KNOB	**B076883-MB** D: 1-1/4” P: 1-1/4” B: 1/2”	**F**	PULL	**B077051-MBBGB** C/C: 160mm L: 8-1/4” W: 3/4” P: 1-7/16”
C	KNOB	**B076882-MB** D: 1-3/8” P: 1-3/8” B: 1/2”	**G**	PULL	**B077053-MBBGB** C/C: 224mm L: 10-13/16” W: 3/4” P: 1-7/16”
D	PULL	**B076888-MBBGB** C/C: 96mm L: 5-3/4” W: 3/4” P: 1-7/16”	**H**	PULL	**B076894-MBBGB** C/C: 12” L: 14” W: 3/4” P: 1-7/16”

Studio II

NEW FINISH ADDS

CH | Chrome

14 | Polished Nickel

SN | Satin Nickel

BGB | Brushed Golden Brass
2022 New Finish

MB | Matte Black
2022 New Finish

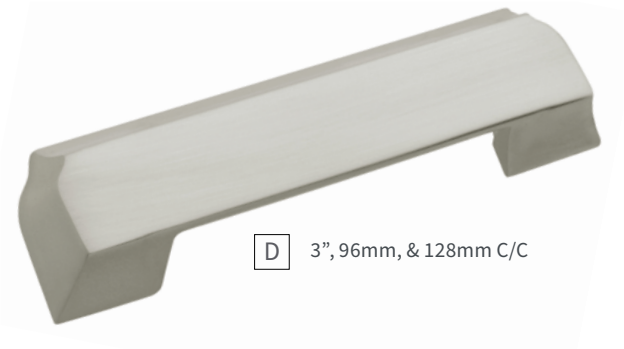

D 3”, 96mm, & 128mm C/C

A 1-1/4” SQ.

E 3” C/C

B 1-1/2” SQ.

F 96mm C/C

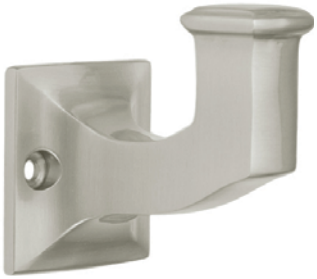

C 1-1/8” C/C

G 128mm C/C

A	KNOB	**B055555-SN** SQ: 1-1/4” P: 1” B: 11/16” SQ	**E**	PULL	**B055550-SN** C/C: 3” L: 3-7/8” W: 7/8” P: 1-1/16”
B	KNOB	**B055577-SN** SQ: 1-1/2” P: 1-1/16” B: 11/16” SQ	**F**	PULL	**B055551-SN** C/C: 96mm L: 4-3/4” W: 1” P: 1-3/16”
C	HOOK	**B055554-SN** C/C: 1-1/8” L: 2-1/8” W: 1-5/8” P: 2-1/8” B: 1-5/8” SQ	**G**	PULL	**B055552-SN** C/C: 128mm L: 6-3/16” W: 1-1/8” P: 1-5/16”
D	CUP PULL	**B055568-SN** C/C: 3”, 96mm, & 128mm L: 5-7/8” W: 1-11/16” P: 1”			

Trellis

NEW FINISH ADDS

14 | Polished Nickel

SN | Satin Nickel

BGB | Brushed Golden Brass
2021 New Finish

MB | Matte Black
2021 New Finish

A 2” DIA.

B 1-1/2” DIA.

C 1-3/16” DIA.

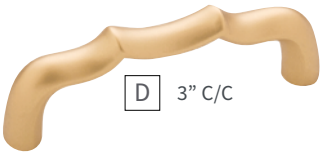

D 3” C/C

E 96mm C/C

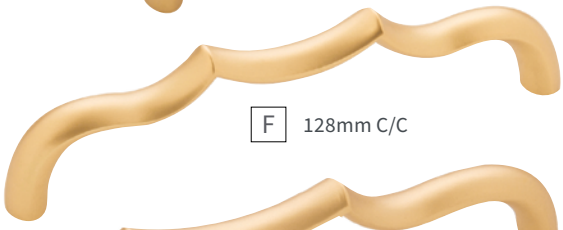

F 128mm C/C

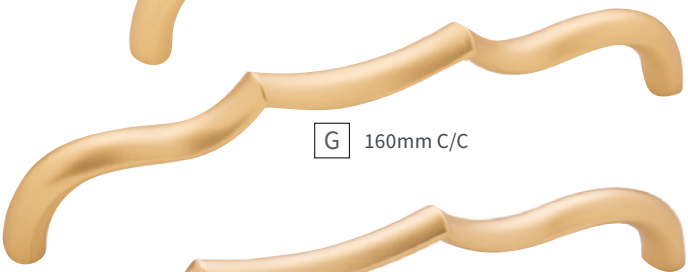

G 160mm C/C

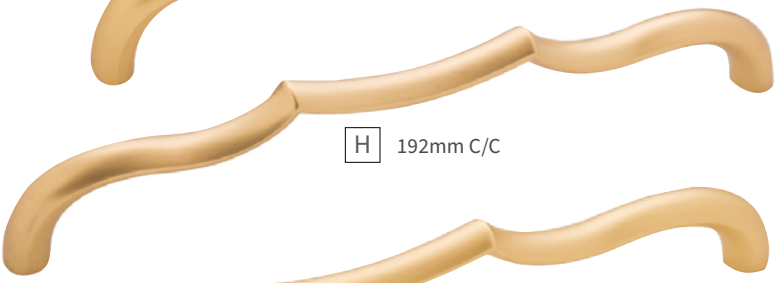

H 192mm C/C

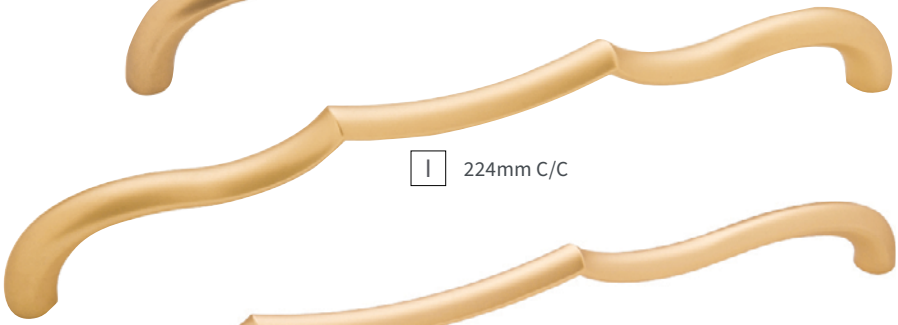

I 224mm C/C

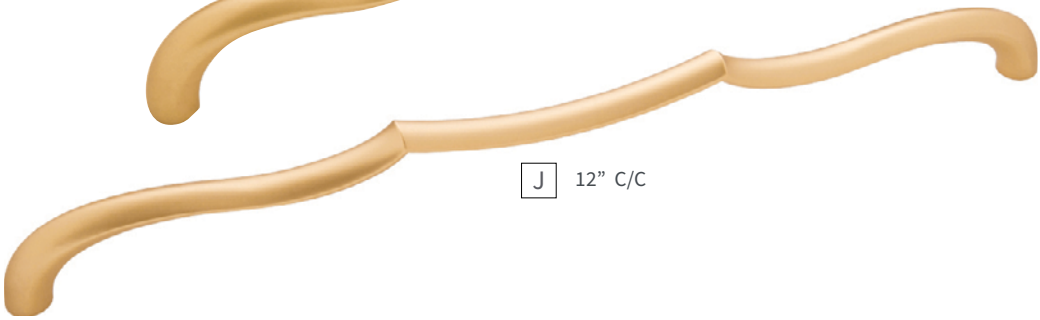

J 12” C/C

A	KNOB	**B076180-BGB** D: 2” P: 15/16” B: 1/2” x 5/16”	**F**	PULL	**B076141-BGB** C/C: 128mm L: 5-7/16” W: 1/2” P: 1-5/16”
B	KNOB	**B076137-BGB** D: 1-1/2” P: 1” B: 3/4”	**G**	PULL	**B076142-BGB** C/C: 160mm L: 6-11/16” W: 1/2” P: 1-5/16”
C	KNOB	**B076138-BGB** D: 1-3/16” P: 1-3/16” B: 3/4”	**H**	PULL	**B076143-BGB** C/C: 192mm L: 8” W: 9/16” P: 1-5/16”
D	PULL	**B076139-BGB** C/C: 3” L: 3-3/8” W: 1/2” P: 1-1/16”	**I**	PULL	**B076144-BGB** C/C: 224mm L: 9-5/16” W: 9/16” P: 1-5/16”
E	PULL	**B076140-BGB** C/C: 96mm L: 4-3/16” W: 1/2” P: 1-1/4”	**J**	PULL	**B076145-BGB** C/C: 12” L: 12-1/2” W: 9/16” P: 1-3/8”

Urbane

NEW SIZE EXTENSIONS & STYLES

SN | Satin Nickel

BGB | Brushed Golden Brass

MB | Matte Black

C 3” C/C

D 96mm C/C

A 1-1/4” DIA.

E 128mm C/C

B 1-1/4” C/C

F 160mm C/C

G 224mm C/C

Learn more about Matte Black (MB) in our **Designer Talks** series.

MB Video

A	KNOB	**B077944MB** D: 1-1/4” P: 1-3/16” B: 1”	**E**	PULL	**B077948MB** C/C: 128mm L: 6-1/4” W: 1-3/16” P: 1-1/2”
B	HOOK	**B077954MB** | **2022 New Design** C/C:1-1/4” L: 5” W: 1-3/4” P: 3-3/4” B: 1-3/4”	**F**	PULL	**B077949MB** | **2022 New Size** C/C: 160mm L: 7-1/2” W: 1-3/16” P: 1-1/2”
C	PULL	**B077946MB** C/C: 3” L: 4-3/16” W: 1-3/16” P: 1-1/2”	**G**	PULL	**B077951MB** | **2022 New Size** C/C: 224mm L: 10” W: 1-3/16” P: 1-1/2”
D	PULL	**B077947MB** C/C: 96mm L: 5” W: 1-3/16” P: 1-1/2”			

Vale

NEW FINISH ADD

CH | Chrome

14 | Polished Nickel

SN | Satin Nickel

BGB | Brushed Golden Brass

MB | Matte Black | **2021 New Finish**

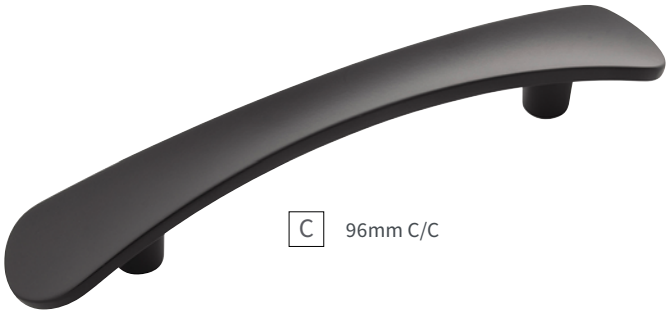

C 96mm C/C

A 1-3/4” DIA.

D 128mm C/C

B 3” DIA.

E 192mm C/C

A	KNOB	**B076526-MB** D: 1-3/4” P: 15/16” B: 1/2”	**D**	PULL	**B076861-MB** C/C: 128mm L: 7-1/4” W: 1” P: 1-1/16”
B	KNOB	**B076527-MB** D: 3” P: 1” B: 1-1/2” X 3/4”	**E**	PULL	**B076862-MB** C/C: 192mm L: 9-13/16” W: 1-1/16” P: 1-1/16”
C	PULL	**B076860-MB** C/C: 96mm L: 6” W: 1” P: 1”			

Verge

NEW FINISH ADDS, SIZE EXTENSIONS & STYLES

CH | Chrome

SS | Stainless Steel

BGB | Brushed Golden Brass | **2022 New Finish**

MB | Matte Black | **2021 New Finish**

C 96mm C/C

D 128mm C/C

E 192mm C/C

F 96mm C/C

G 128mm C/C

H 160mm C/C

A 7/8” DIA.

B 1-3/16” DIA.

A	KNOB	**B076864-CH** D: 7/8” P: 1-1/8” B: 1/2”	**E**	PULL	**B076877-CH** C/C: 192mm L: 7-15/16” W: 1-3/8” P: 1-3/16”
B	KNOB	**B076865-CH** D: 1-3/16” P: 1-1/4” B: 11/16”	**F**	PULL	**B079429-CH** | **2022 New Design** C/C: 96mm L: 4-3/4” W: 1/2” P: 1-7/16”
C	PULL	**B076871-CH** C/C: 96mm L: 4-1/8” W: 1-3/8” P: 1-3/16”	**G**	PULL	**B079413-CH** | **2022 New Design** C/C: 128mm L: 6” W: 1/2” P: 1-7/16”
D	PULL	**B076873-CH** C/C: 128mm L: 5-7/16” W: 1-3/8” P: 1-3/16”	**H**	PULL	**B079414-CH** | **2022 New Design** C/C: 160mm L: 7-1/4” W: 1/2” P: 1-7/16”

Anders

Matte Black | 160mm C/C Pulls | B078791MB

Brighton

Brushed Golden Brass | 96mm, 128mm C/C Pulls and 1” Sq. Knob
B077893BGB, B077894BG, B077890BGB

Cambridge

Brushed Golden Brass | 1-1/4” Sq. Knob, 3” and 96mm C/C Pulls
B077924BGB, B077925BGB, B077926BGB

Corsa

Matte Black | 128mm & 160mm C/C Pulls | B078786MB

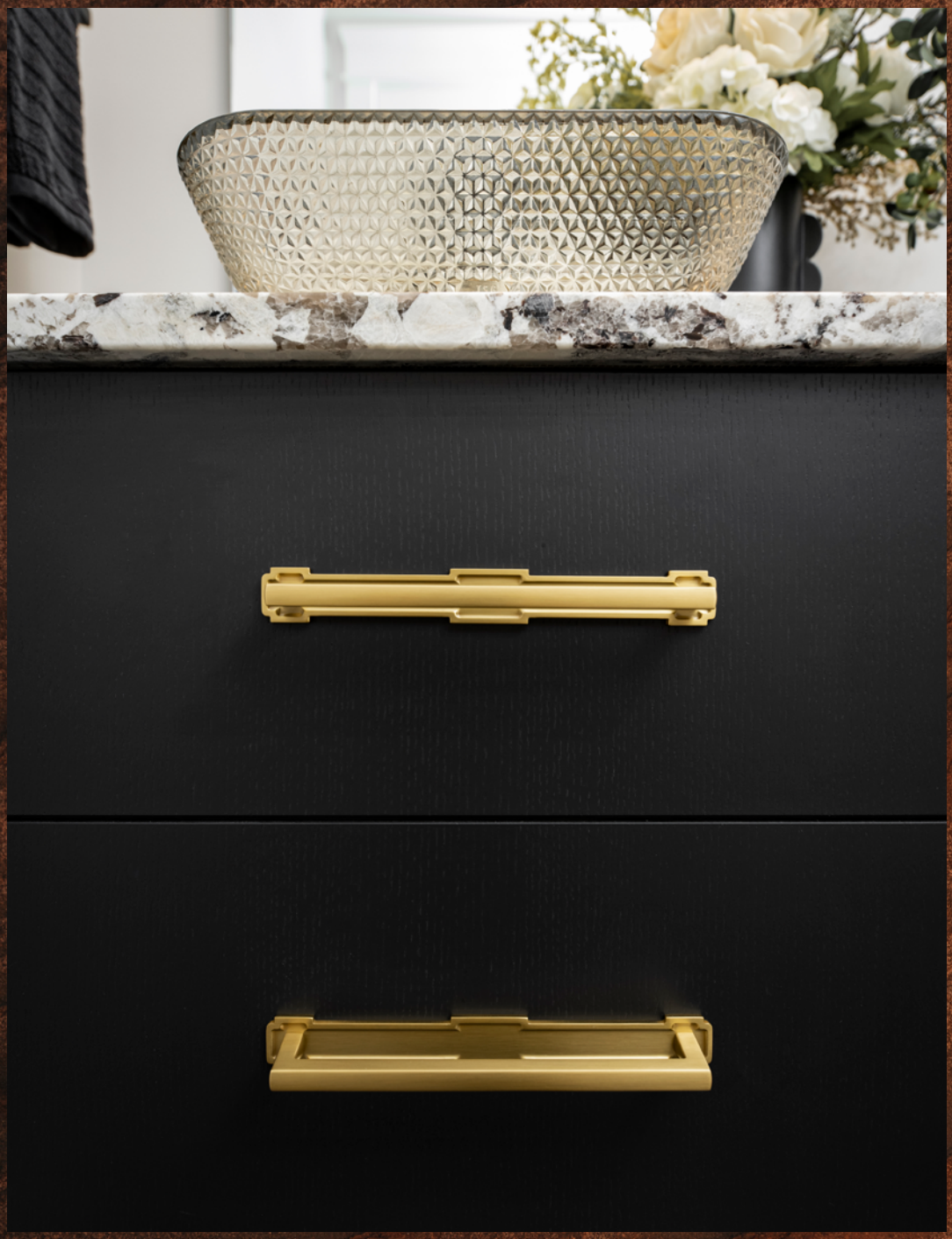

Coventry

Brushed Golden Brass | 224mm C/C Pulls with Coordinating Backplates
B079452BGB, B079454BGB

Emerge

Matte Black | 128mm C/C Cup Pulls | B077048-MB

Facette

Chrome | 128mm C/C Pulls | B072425-CH

Firenze

Black Marble with Brushed Golden Brass | 5” Length Knobs | B077044MB-BGB

Fuller

Matte Black | 160mm C/C Pulls | B076291-MB

Monarch

Champagne Bronze | 224mm C/C Pulls | B076645-CBZ

Monroe

Brushed Golden Brass | 128mm C/C Pulls | B076900-BGB

Olivet

Matte Black | 12” C/C Pulls | B075321-MB

Reserve

Satin Nickel with Brown Leather | 128mm C/C Pulls | B077980LRSN

Sandrine

Champagne Bronze | 2” Sq. Knobs | B077513-CBZ

Sinclaire

Matte Black with Brushed Golden Brass | 224mm C/C Pulls | B077053-MBBGB

Studio II

Matte Black | 128mm C/C Pulls | B055552-MB

Vale

Matte Black | 128mm Pull and 1-3/4” Knobs | B076861-MB, B076526-MB

Verge

Matte Black | 192mm C/C Pull with 1-3/16” Knob | B076877-MB, B076865-MB

HEADQUARTERS

3100 Broadway SW
Grandville, MI
49418

Phone: 1.877.556.2918
Fax: 1.800.858.2119

belwithkeeler.com

DISCLAIMER

The information in this catalog is based on the latest product information available at the time of printing. The right to discontinue items without advance notice and to make changes as to color, materials and other specifications at any time is reserved. Call 1.877.556.2918 for latest product availability.

© 2022 Belwith Keeler® is a brand of Belwith Keeler Décor Solutions® • All Rights Reserved • #79549